# Wireless Rh & Temperature Transmitter

## WiRhT78-NFLP



## WiRhT78-FLP




The Wireless Rh & Temperature Transmitter is designed for EMS applications to meet the requirement of Measurement, Display & Data logging of Rh & Temperature with Wireless data transmission to SCADA System via Central Base station.

### Features

- Measurement & Data logging of Relative Humidity and Temperature
- Wireless interface for easy setup and data download
- Selectable data Recording Time Interval: 1 to 255 min
- Battery Life time-6 months @ 5min Tx interval
- Remote configurable alarm and warning limits for Rh and temperature
- Battery status monitoring & communication remotely
- Power options: Replaceable batteries (AA) / 24V AC/DC
- Data logging of 524280 records (364 days with 1min interval)
- Designed to mount on wall with inbuilt or extension probe
- Sensors are interchangeable

### Applications

- Environmental Monitoring for Clean Rooms
- Warehouse Data logging
- Pharmaceutical Industry

### Network Architecture

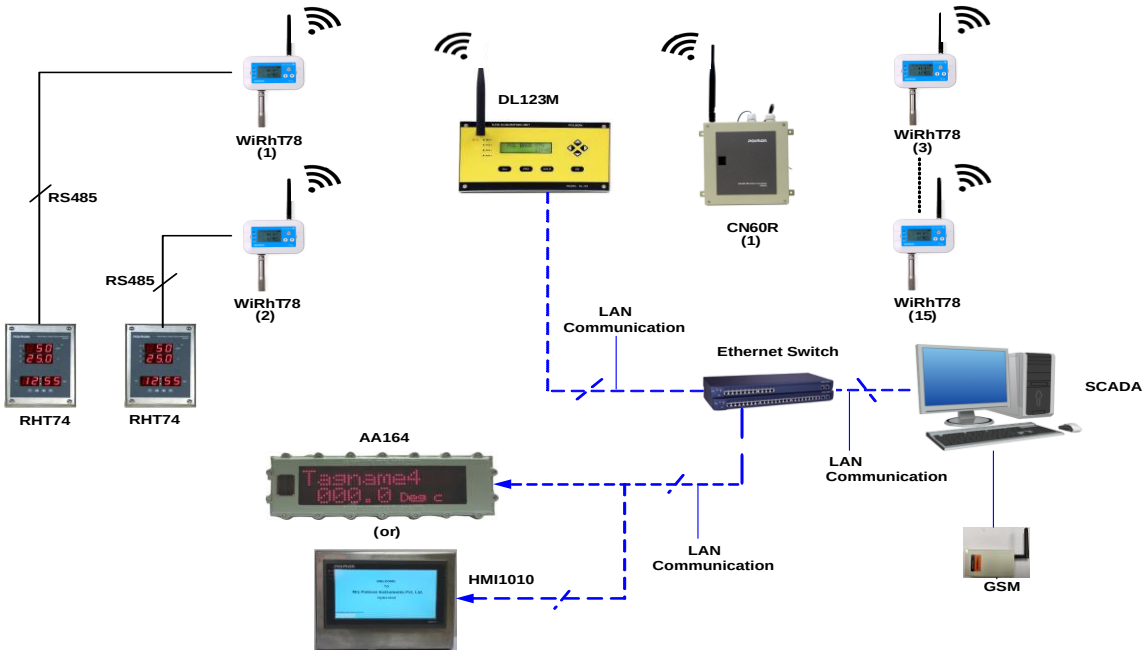

# Specifications

| Technical | | |
|---|---|---|
| | Battery Operated | Power Operated |
| Measurement Range | RH : 0 -100%RH | |
| | Temp. : 5 - 50°C | |
| Accuracy | RH : ±2%. For the range 10-80% and ±3% for remaining<br>Temp. : ±0.3 °C. For the range 5-50°C | |
| Resolution | RH : 0.1% | |
| | Temp. : 0.1 °c | |
| Response time | Typically 10sec | |
| Clock | Network Time Synchronization | |
| Remote Access Parameters | PV's, Battery Status, Signal Strength | |
| Data logging | 524280 Records i.e 364 days with<br>1 min logging interval<br>Interval Programmable 1 - 255min<br>Ring Memory (Including Alarm Events) | |
| Power supply | 4*1.5V,AA, Energizer L91 | 24V AC/DC@100mA |
| Battery life time | 6 months @ 5min Tx interval | --- |
| Display | Graphical LCD | |
| Keys | Tactile Keys for NFLP | |
| | Magnetic Keys for FLP | |
| Indication Symbols | Battery Status | Power status |
| | RF, Signal strength, Network, Engineering units | |
| Local alarm LED Status | Low batt | --- |
| | RH & Temp deviations | |
| Communication for data transmitting | Wireless Communication | |
| Communication for Remote Display unit | --- | RS485 |

| Wireless Communication | |
|---|---|
| Frequency | 865MHz to 867MHz |
| Distance | 1500 Meters Line of Sight |
| **Sensor Interface** | |
| Mounting Sensor | Inbuilt Probe / Extension Probe |
| Probe dust filter material | SS Sintered |
| Housing material | SS316 |
| Dimensions | 95x15 mm |
| **Physical for NFLP** | |
| Protection class | IP 65 for Instrument, IP60 for sensor |
| Dimensions (W X D X H) | 90 x 130 x 40 mm |
| Housing material | ABS Plastic |
| Mounting | Wall mounting |
| Weight | 400g approx. |
| **Physical for FLP** | |
| Protection class | Flame proof for Zone1, Zone2 Gas Gr.IIA, IIB |
| Dimensions (W X D X H) | 213 x 148 x 55 mm |
| Housing material | Aluminum Alloy |
| Mounting | Modular wall Flush Mounting / On Wall mounting |
| Weight | 2.5kg approx. |
| **Environmental** | |
| Storage Temperature | 10 - 50°C |
| Humidity | 10-95%RH, Non-Condensing |
| **General** | |
| RH & TEMP Extension Probe (optional) | Length : 05 (or) 10 meter |

| Ordering Information for WiRhT78 | | | | | |
|---|---|---|---|---|---|
| **WiRhT78** | **X** | **X** | **X** | **X** | **X** |
| *Model No.* | *Sensor type* | *Display* | *Mounting Type* | *Power* | *Output* |
| WiRhT78 | 1 – inbuilt Replaceable Digital | 1 – Yes | 1 – NFLP Wall Mounting | 1 – Battery | X – Wireless |
| | | | 2 – FLP Wall Mounting | 2 – 24V AC/DC | 1 – Wireless + RS485 (Modbus mater) |

| Ordering Information for WiTET92E | | |
|---|---|---|
| **WiTET92E** | **X** | **X** |
| *Model No.* | *Cable Length* | *Future Use* |
| WiTET92E | 1 – 05meter | X |
| | 2 – 10meter | |

Note: To be Ordered Separately

**Mechanical Dimensional Drawing for NFLP**

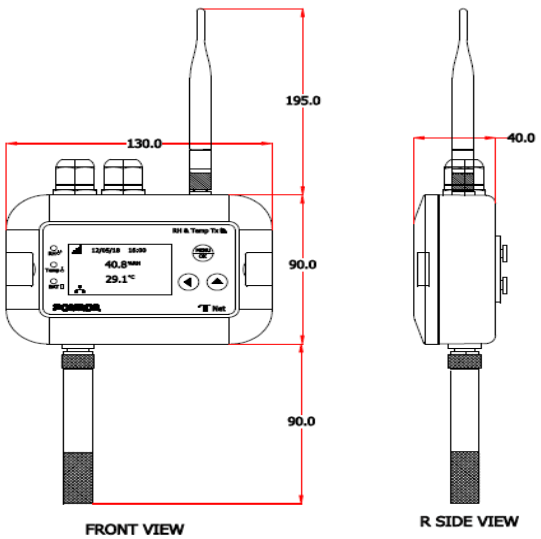


**Mechanical Dimensional Drawing for FLP**

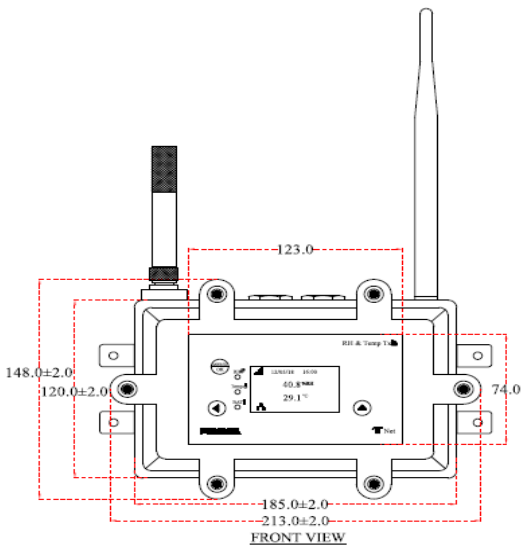



**Head Office: POLMON INSTRUMENTS PVT.LTD**
**(AN ISO 9001: 2015 Certified Company)**
"POLMON HOUSE" Nizampet Road, Kukatpally, Hyderabad–500085
**Ph No: 040-23053046, 23057308**
**e-mail: polmon@polmon.com URL: www.polmon.com**



**All specifications are subject to change without notice.**