HygroPol

RhT75



Calibration Master

Replaceable Sensor

Battery Operated

Handheld

HygroPol is a Master Handheld instrument that measures, displays and records Relative Humidity and Temperature with ±0.8% Rh & ±0.1°C accuracy. HygroPol can be used as a master to calibrate other instruments. The recorded data can be viewed on the display or it can be downloaded into PC through an USB port. 21CFR complaint reports can be generated by using a host software.

RhT75 has a real time clock to time stamp the recorded data.

RhT75 is perfect for spot checking HVAC installations, manufacturing and storage areas, and generally for all ambient air measurements within the temperature range of -10°C to 60°C.

It is well suited for a wide range of environment monitoring where Temperature/ RH conditions are critical.

Features

- Measures Relative Humidity and Temperature
- Measurement Range for Rh is 0 to +100%
- Measurement Range for Temperature is -10 to +60°C
- Accuracy Rh: ±0.8%, Temp. : ±0.1°C
- Dew point display
- Dedicated key for Min/Max value display
- Flexible backlit and display brightness control
- Real time date and time display
- Real time battery status indication
- User- programmable alarm(visual) limits for Rh and Temperature
- Long battery life(>100 hours of continuous use)
- Designed for spot-checking and field calibration
- Handheld instrument
- Dedicated key for instant/spot data recording*
- Viewing the data records*
- Selectable data recording time interval: 1 to 1440 minutes*
- Stores16,000 records*
- USB interface for data download*
- Delayed/Trigger-start/Time Event/Manual log option*
- Windows7,10 compatible analysis and reporting software*

Applications

- Healthcare, sciences
- Food industry
- HVAC/Building management
- Printing / Paper industry
- pharmaceutical industries

Note: - '*' These features are offered only in RhT75-2-X

Specifications

Technical	
Model No	RhT75-X-X
Humidity Measurement	
Range	0-100 %Rh
Accuracy at 23°C	±0.8% Rh
Repeatability	0.3% Rh
Long term stability	< 1% Rh / year
Response time	Typical 10sec, 63% of a 35 to 80% RH step change (1m/sec air flow at sensor)
Temperature measurement	
Range	-10 to 60°C
Accuracy at 23°C	±0.1°C
Repeatability	0.05°C
Long term stability	< 0.1°C / year
Response time	Typical 4 sec, 63% of a step change (1m/sec air flow at sensor)
Calculated parameters	
Psychometric calculations	Dew point
Probe General	
Probe material	Polycarbonate
Probe dust filter material	Polyethylene
Housing material	Polycarbonate
Housing protection grade	IP65
CE / EMC compatibility	CE conformant 2007/108/EG
FDA / GAMP conformity	21 CFR Part11 / GAMP5
Dimensions	135x15 mm

General	
Display	Graphical LCD , alarm and low battery indication
Power supply	2x1.5V, AA battery
Battery life time	>100 hours of continuous use (when backlit is OFF)
PC interface	Micro USB cable. USB2.0*
Data logging capacity	16,000 records*
Logging time interval	1 min to 1440 minutes*
Dimensions (L X W X H)	300 X 80 X 30 mm
Weight	230grams(approx.)
Environmental	
Storage and transit	-20 to +70 °C / 0 to 100 %RH, non condensing
Operating limits at electronics	-10 to 60 °C; 0 to 100 %RH, non condensing
Temperature limits at probe	Same as Operating limits at electronics
Maximum humidity at probe	Same as Operating limits at electronics
Maximum air velocity at probe	20 m/s (3,935 ft /min)

Ordering Information for RhT75		
RhT75	X	X
Model No.	*USB*	*Future use*
RhT75	1 –Memory storage not available	X
	2 – Storage for 16,000 Records & USB downloading	

Mechanical Drawing for RhT75

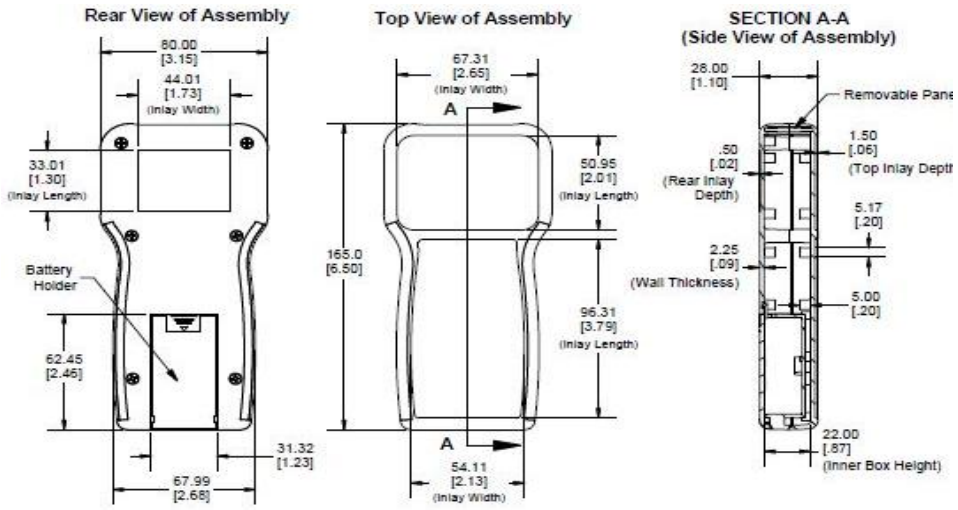

HYGROLOG SENSOR FIXING PLATE

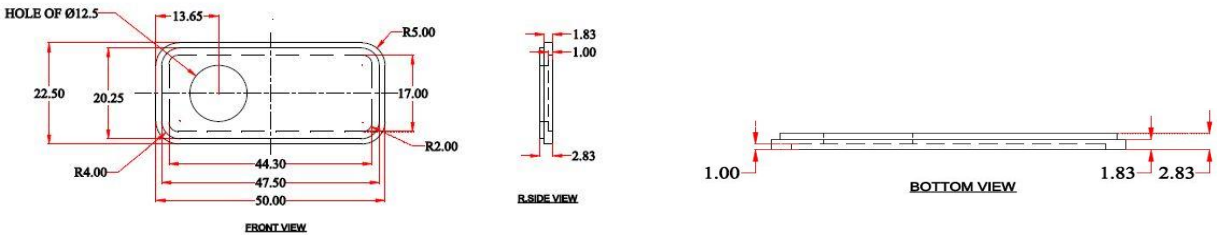

Head Office: POLMON INSTRUMENTS PVT.LTD
(AN ISO 9001: 2015 Certified Company)
"POLMON HOUSE" Nizampet Road, Kukatpally, Hyderabad–500085
Ph No: 040-23053046, 23057308
e-mail: polmon@polmon.com URL: www.polmon.com

All specifications are subject to change without notice.

Doc. Ref. RhT75/121121/V1.1