POLMON
Measure. Control. Automate.

Digital DP Gauge

DPT-56



The "DIGITAL DP GAUGE (DPT56)" Is specially designed to measure difference between two pressures and to transmit current signal to the process indicators or through OPTO Isolated RS485 communication to data loggers or control action by relay output, which can help the user to monitor the DP and to take necessary actions to maintain the room conditions as per the requirement or application

Features

- Direct Plug in Replacement to Analog Gauges with Digital Display
- Opto Isolated RS485 (MODBUS / Proprietary)
- 4-20 mA Retransmission Output
- Channel Display with 0.39" Seven Segment Red LED Display
- Optional Clean Room compatible SS Flush Mountable Faceplate
- User Configurable Inbuilt Buzzer
- Password Protected Programming and other programming modes
- Software Calibration

Applications

- HVAC
- Pharmaceutical industry
- Blood Banks
- Horticulture

Network Architecture

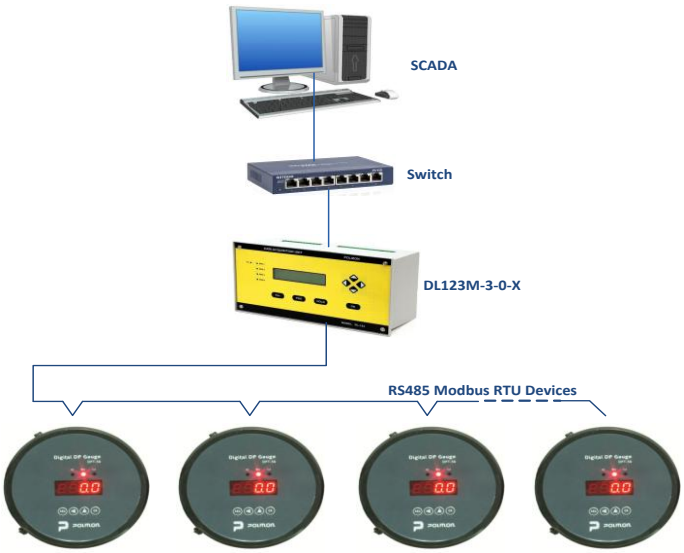

Specifications

Technical	
Model No	DPT56-X-X-X
No. of Inputs	1
Measuring Range	-100 mmWC to + 100 mmWC
Input Accuracy	+/- 1.5 % of reading ± 3counts for ±25.4 mmWC and ±1.5% FSR for remaining
Resolution	Depends upon the selected measured units
Communication	RS485 Proprietary / MODBUS RTU 4-20 mA Output Relay Output
Output Accuracy	± 0.05 mA
Response time	1 Sec
Audio Alarm	Inbuilt Buzzer provided to beep in set values violated condition with user configurable Snooze option
Visual Alarm	Low, Normal, High LED Status display

Display	0.39" 4 digit seven segment LED display
Keypad	Soft touch Tactile Keypad
DP Sensor	Inbuilt
Calibration	3-point software calibration (User selectable)
Power Supply	
Power supply	18-36V DC, 200mA
Physical	
Enclosure	SS304 (Optional)
Dimensions	Size: Face Dia. 134 mm, Mounting Dia. 114, Depth 40mm (Approx.)
Weight	Weight: 1.5Kg. (Approx.)
Mounting	Modular Wall / Brick Wall with SS Face Plate Assembly
Environmental	
Operating Temperature	10 - 60°C
Humidity	10-95%RH, Non-Condensing

Note: accessories are not included and order separately

Ordering Information for DPT56			
DPT56	**X**	**X**	**X**
Model No.	*Enclosure Type*	*Output*	*Future Use*
DPT56	1 – Aluminum	1 – RS485	X
		2 – 4-20 mA	
		3 – Relay	

Mechanical Drawing of DPT56

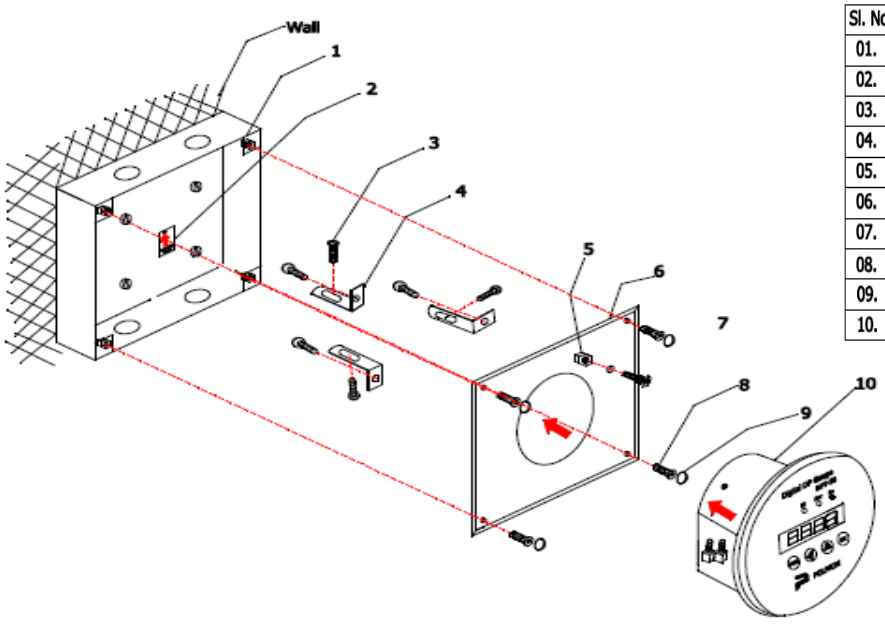

Sl. No.	NAME	Qty
01.	DPT56 On Wall Concealed Box	01
02.	Direction Indication Sticker	01
03.	M4X6 MS PHS	06
04.	Mounting L Clamp	03
05.	Nut SS M8x5	01
06.	DPT56 SS Face plate	01
07.	DPT56 DP Port	01
08.	DPI38R SS Front Panel Fixing Screws	04
09.	TM632S SS Face Plate Fixing Counter Screw Cap	04
10.	DPT-56 Instrument	01

Head Office: POLMON INSTRUMENTS PVT.LTD
(AN ISO 9001: 2015 Certified Company)
"POLMON HOUSE" Nizampet Road, Kukatpally, Hyderabad–500085
Ph No: 040-23053046, 23057308
e-mail: polmon@polmon.com URL: www.polmon.com

All specifications are subject to change without notice.
Doc. Ref. DPT56/121121/V1.1