POLMON
Measure. Control. Automate.

Differential Pressure & Temperature Indicator DPT-54I



"DPT54I" is specially designed to meet requirements of Differential Pressure (DP) and Temperature measurement in Clean rooms and Process Industries.

It is designed as the most convenient user Instrument with respect to Process values display and programming modes

The DPT-54I measures DP, Temperature and display on provided inbuilt display as well transfers data to Data logger for data storage

Features

- Inbuilt DP and Temp sensors which avoids cable between Transmitter and Indicator
- OptoIsolated RS-485 Communication to transfer the data for storage
- Dual display for displaying DP and Temperature Individually
- Designed to mount on either Modular wall or RCC wall
- Process value violations display indication
- User selectable set limits for process value violations
- Inbuilt Buzzer to provide audible Process value violation
- Optional PLC Communication MODBUS protocol Interfacing (Factory Configurable)
- Software calibration

Applications

- HVAC
- Pharmaceutical industry
- Blood stations, pharmacies
- Horticultural and cultivation of plants

Network Architecture

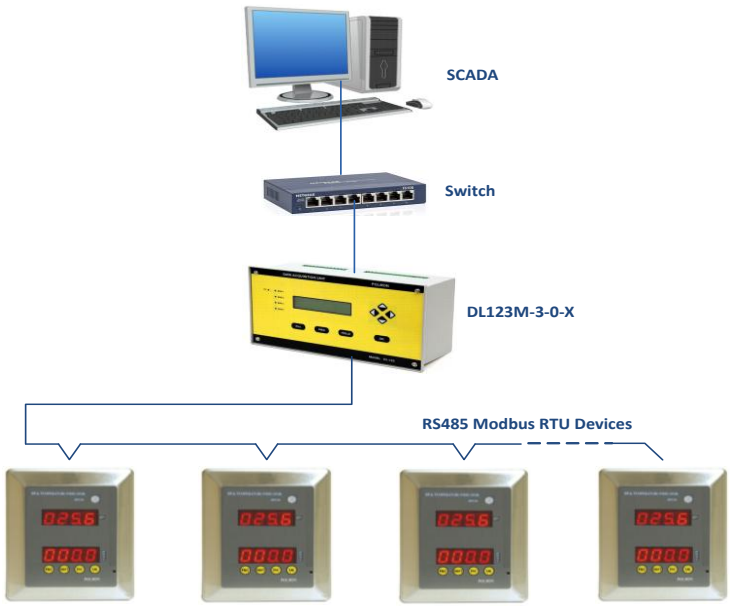

Specifications

Technical	
Model No	DPT-54-R-X
No of Inputs	2
Measurement Range	DP : +/- 100 mmWC Temp. : 0 to 60°C
Input Accuracy	DP: +/- 1.5 % of Reading ±3counts for ±25.4 mmWC or ±254 Pascal and ±1.5% FSR for remaining Temp: ±0.4°C For the range 0-60°C
Resolution	DP: 0.1 mmWc /1Pa, Temp: 0.1/1°C
Communication	RS485 MODBUS RTU
Response time	Typically 12sec
Buzzer	In built Buzzer provided to beep in set values violated condition with user configurable Snooze option

Display	0.39" 4 digit seven segment LED display
Keypad	Tactile Keys
Calibration	Software (Through tactile keys)
Power Supply	
Input Supply	24VDC, 200mA
Physical	
Enclosure	MS Box with SS face plate
Dimensions (LxWxD)	90x110x49mm
Mounting Options	Brick / Modular Wall mounting
Weight	0.5Kg (Approx)
Environmental	
Operating Temperature	5-60°C
Humidity	10-95%RH, Non-Condensing

Note: accessories are not included and order separately

Ordering Information for DPT54		
DPT-54	**X**	**X**
Model no	*Enclosure Type*	*Future use*
DPT-54	R – NFLP	X

Mechanical Drawing of DPT-54

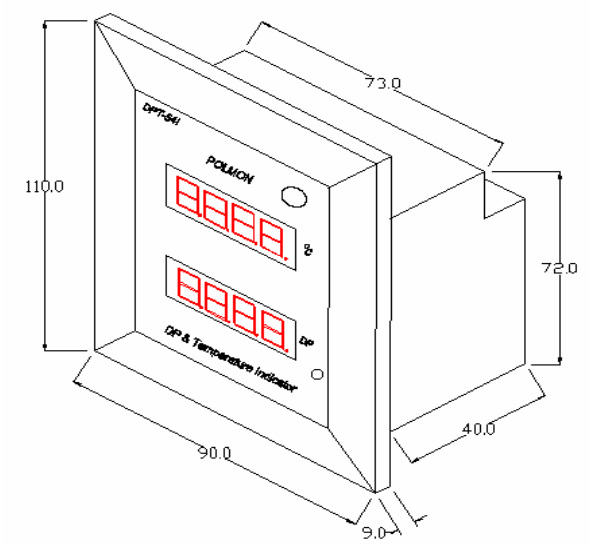

Installation Drawing of DPT-54

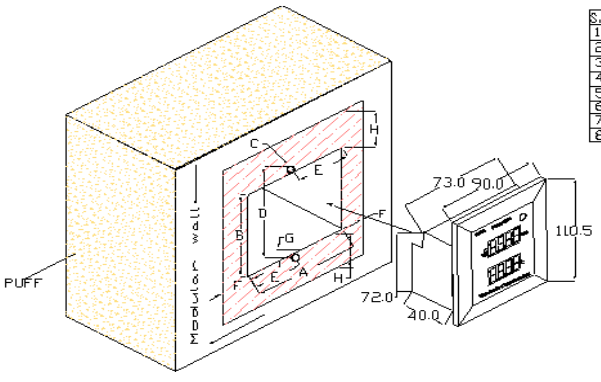

S.NO	DIMENSIONS(mm)	
1.	A	75mm
2.	B	74mm
3.	C	2.5Ø
4.	D	81mm
5.	E	37.5mm
6.	F	30mm
7.	G	4mm
8.	H	60mm

S.NO	ACCESSORIES	Qty
1.	INSERTS 3mm	2
2.	3X12MSFHS	2

Head Office: POLMON INSTRUMENTS PVT.LTD
(AN ISO 9001: 2015 Certified Company)
"POLMON HOUSE" Nizampet Road, Kukatpally, Hyderabad–500085
Ph No: 040-23053046, 23057308
e-mail: polmon@polmon.com URL: www.polmon.com

All specifications are subject to change without notice.

Doc. Ref. DPT-54/121121/V1.1