POLMON
Measure. Control. Automate.

DIFFERENTIAL PRESSURE TRANSMITTER/INDICATOR DPT52

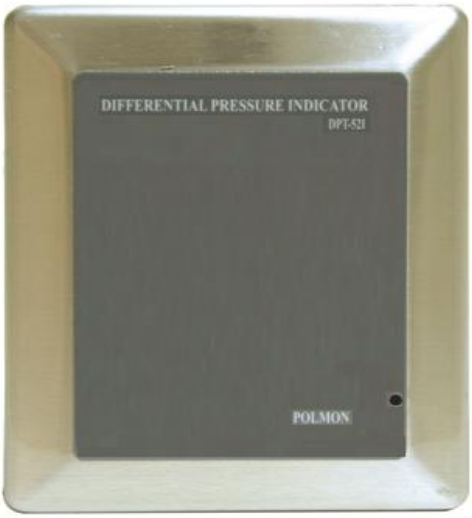



"DPT52" is specially designed to measure Differential pressure and transmit digital data or 4-20mA to Indicators or Data loggers, which enables to monitor the DP and to take necessary actions to maintain the room conditions as per the requirement or application.

Features

- 4-20mA/Relay/RS485/(RS485+Relay) / Dual 4-20mA Output
- MODBUS RTU communication Protocol
- Inbuilt Digital Differential Pressure Sensor
- Test & Calibration certificate traceable to National Standards

Applications

- Pharmaceutical industry
- Blood Banks
- Horticulture
- HVAC

Network Architecture

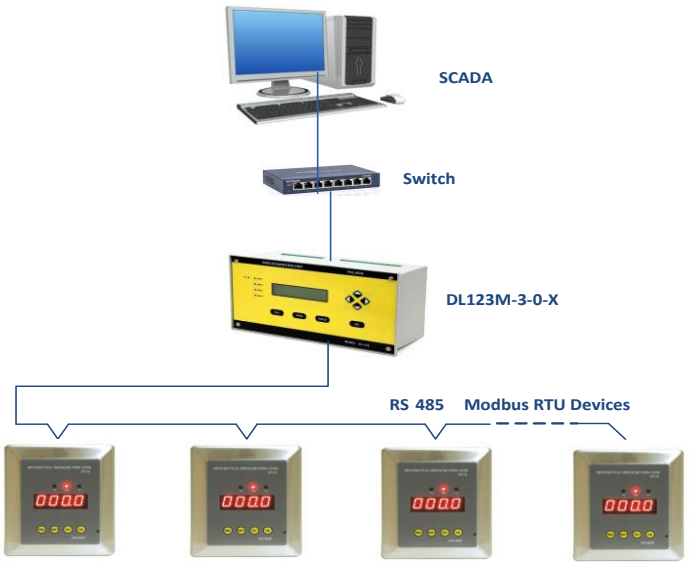

Specifications

Technical					
Model NO	DPT52-R-1-X-X	DPT52-R-2-X-X	DPT52-R-3-X-X	DPT52-R-4-X-X	DPT52-R-5-X-X
No .of Units	10				
No .of Inputs	1				
Measuring Range	-100 mmWC to + 100 mmWC				
Input Accuracy	+/- 1.5 % of Reading ± 3counts for ±25.4 mmWC and ±1.5% FSR for remaining				
Resolution	Depends upon the selected measured units				
Communications	RS485	4-20mA Output	Relay Output	RS485 & Relay Output	Dual 4-20mA Output
Output Accuracy	± 0.05 mA				
Response time	1 sec				
Buzzer	In built Buzzer provided to beep in set values violated condition with user configurable Snooze option				
Display	7 Segment 0.39" LED Display				
Keypad	Tactile Keys				
Calibration	Software (Through Tactile Keypad)				
Power Supply					
Input Supply	24V DC,200mA				
Physical					
Enclosure	DPT52 MS BOX 73X72X40mm Brick Wall Concealed Box 95X79X50mm				ABS Plastic Box with SS back plate
Dimensions	DPT52 MS BOX 73X72X40 Brick Wall Concealed Box 95X79X50				Box- 135x75x40mm Back Plate- 165x75x1.2mm
Face Plate	SS 304				No
Mounting	Modular wall & Brick wall Mounting				On Wall Mounting
Weight	0.25 Kg(Approx)				
Environmental					
Operating Temperature Range	5-50°C				
Humidity	10-95%RH. Non-Condensing				
Environmental Ranges	Air & Neutral gases				

Ordering Information for DPT52				
DPT-52	**X**	**X**	**X**	**X**
Model no	*Enclosure Type*	*Output type*	*Display type*	*Future Use*
DPT-52	R – NFLP	1 – RS485 Communication (Proprietary/Modbus)	0 – No Display, No Alarms	X
		2 – 4-20mA	1 –Display, with Alarms	
		3 – Relay		
		4 – RS485+Relay		
		5 – Dual 4-20mA		

MECHANICAL DRAWING OF DPT52-R-X-X-X

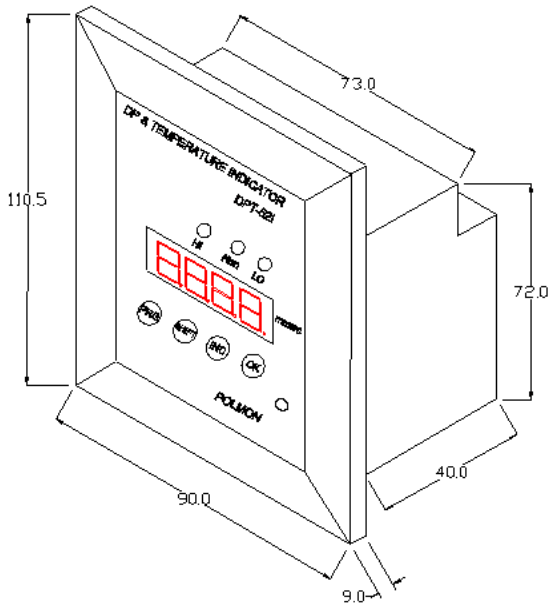

Head Office: POLMON INSTRUMENTS PVT.LTD
(AN ISO 9001: 2015 Certified Company)
"POLMON HOUSE" Nizampet Road, Kukatpally, Hyderabad–500085
Ph No: 040-23053046, 23057308
e-mail: polmon@polmon.com URL: www.polmon.com

All specifications are subject to change without notice.
Doc. Ref. DPT52-R/121121/V1.1