POLMON
Measure. Control. Automate.

CLEAN ROOM PROCESS MONITOR

DPI38I-R



"DPI38I" is specially designed for Clean rooms to meet the requirement of Measurement, Display & Data logging of Relative Humidity, Temperature and Differential Pressure for meeting the Regulatory requirements in API's & Formulations

Features

- 1/2/3 Channel Display with 0.8" Seven Segment Red LED Display
- Wide range of Input Options for Remote Tx interface / Inbuilt Sensors
- Programmable Set points for each parameter (HI/LO) for Visual and LED Announciation
- User configurable (enable/disable) Inbuilt Buzzer to provide audible Process value violation
- Option for Buzzer Acknowledgement and Snoozing
- Process value violations display indication
- Password protected calibration & other programming modes
- Software Calibration & Ranging through soft touch tactile keypad
- User configurable (enable/disable) Inbuilt Relay (1- NO, NC)
- Relay Output with Programmable Acknowledgement and Snoozing
- Opto Isolated RS-485 Communication to transfer the data for storage through Proprietary protocol or MODBUS protocol
- MODBUS interface Max 31 Devices without Repeater
- Programmable Baud Rate selection 9600 / 19200 / 38400
- Optional 4-20mA O/P for single channel
- Safe area applications with SS Faceplate, flush mount (Brick Wall / Modular Wall) and On Wall Mount for Clean Room Application
- Clean Room compatible Concealed Enclosure (Depth 45 mm)

Applications

- Environmental Monitoring for Clean Rooms

Network Architecture

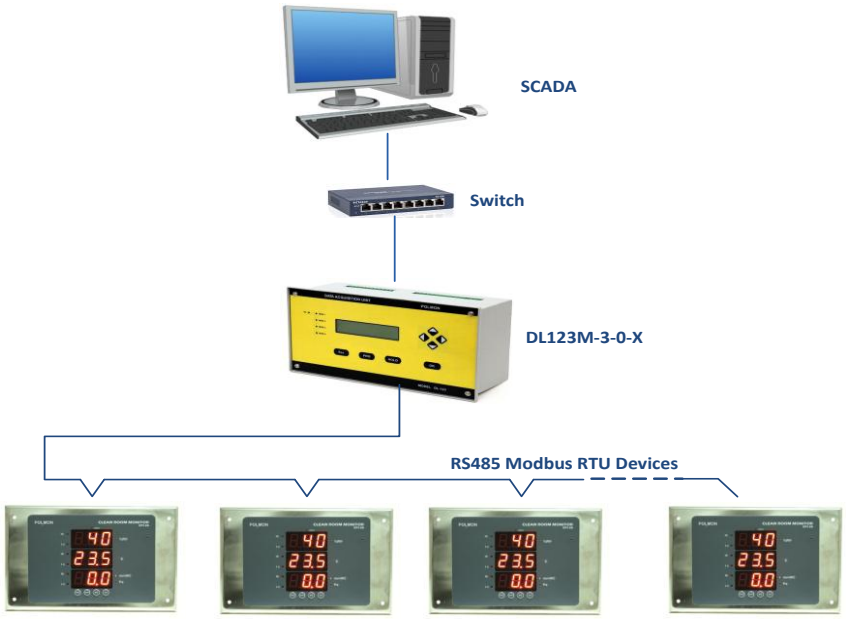

Specifications

Technical

Model No	DPI38I-X-X-X-X-X-X	
No of Channel	1/2/3	
	Inbuilt Sensor	External Sensor
Input Type	RH, Temperature & DP	mA : 4-20mA, Voltage : 0-10V (Hardware configurable)
Measurement Range	DP : ±100mmWC / -199 to 980 Pascal RH : 0 to100%RH Temp. : 0.0°C to 60.0°C	Programmable
Input Accuracy	DP: ±1.5% FSR RH: ±2% for the range 10 to 90% and ±3% for remaining Temperature: ±0.4°C for the range 0.0 to 60.0°C	0.15% of FSR ±1Count
Resolution	DP: 0.1 mmWC for -19.9 to 99.9 mmWC and 1 mmWC for Remaining / 1 Pascal RH: 1% Temp: 0.1°C	Programmable
Output	Default: - Relay (1 - NO, NC) Output 1: - Communication (RS-485 - Proprietary / MODBUS/RTU) Output 2: - Current O/P (4-20mA@500 Ω load, Software Selectable for a Single Channel) (Optional)	
Output Accuracy	± 0.05 mA	
Response time	DP: 1 second RH & Temp: Typically 12 second	1sec
Buzzer	In built Buzzer provided to beep in set values violated condition with user configurable Snooze option	
Display	CH1: 3 digit 0.8″ seven segment, Red LED with Hi and Lo LED Indication CH2: 3 digit 0.8″ seven segment, Red LED with Hi and Lo LED Indication CH3: 3 digit 0.8″ seven segment, Red LED with Hi and Lo LED Indication	
Keypad	Tactile Keys	
I/P Impedance	mA : 100 Ω, Voltage: > 1MΩ	

Power Supply

Input Supply	20-36Volt AC/DC, 250mA

Physical

Enclosure	SS Face Plate with Flush Mount MS
Dimensions	Cutout: 150x210x45 (LxWxD)mm , SS Plate: 170x260 x5 (LxWxD)mm
Mounting	Brick Wall, Modular Wall and On Wall (Order Optional Accessories)

Environmental

Operating Temperature	10 to 50°C
Humidity	10-95%RH, Non-Condensing

Note: accessories are not included and order separately

Ordering Information for DPI38I

DPI38I	X	X	X	X	X	X
Model No.	*Enclosure Type*	*Display*	*Output1*	*Output2*	*Power*	*Future*
DPI38I	R-NFLP	#1- DP (Inbuilt Sensor)	1 - RS485	1 - NA	1-24VAC/DC	X-Screw type Bend Plate
		#2- Temp (Inbuilt Sensor)		2 - 4-20mA (for Single I/P)		1-Push Fit
		#3- RH + Temp (Inbuilt Sensor)				
		#4- Temp + DP (Inbuilt Sensor)				
		#5- RH + Temp + DP (Inbuilt Sensor)				
		**6- DP (Remote Input)				
		**7- Temp (Remote Input)				
		**8- RH + Temp (Remote Input)				
		**9- Temp + DP (Remote Input)				
		**10- RH + Temp + DP (Remote Input)				
		**11- Temp (Remote Input) + DP (Inbuilt Sensor)				
		**12- RH + Temp (Remote Input) +DP (Inbuilt Sensor)				

Specify Inbuilt Input Range, Unit & Resolution
**-Specify Remote Input Range, Unit & Resolution

Mechanical Drawing of DPI38I

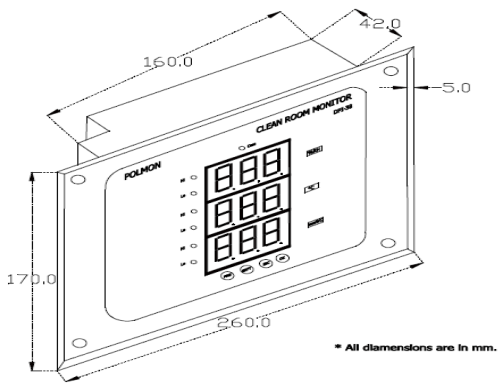

Installation Drawing of DPI38I (Wall Mount)

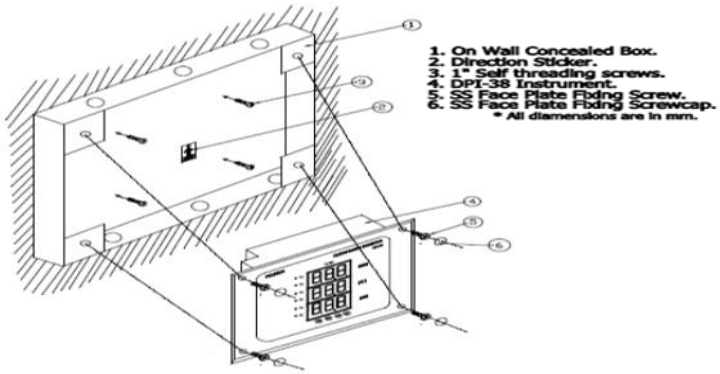

Head Office: POLMON INSTRUMENTS PVT.LTD
(AN ISO 9001: 2015 Certified Company)
"POLMON HOUSE" Nizampet Road, Kukatpally, Hyderabad–500085
Ph No: 040-23053046, 23057308
e-mail: polmon@polmon.com URL: www.polmon.com

All specifications are subject to change without notice.
Doc. Ref. DPI38I/121121/V1.2